Lab 2: Non-Ideal Sources

Goals for Lab 2 –
The goal of this lab is to understand how a practical voltage source works and to measure the Thevenin equivalent of a household battery.

Theory –
Ideal and Non –Ideal Sources

In class we treat a voltage source as ideal. That is, it produces a fixed voltage regardless of what load we place across it. In reality, most practical voltage sources have a small internal resistance. We model a practical voltage source as an ideal voltage source in series with a source resistance as shown in Figure 2.1.

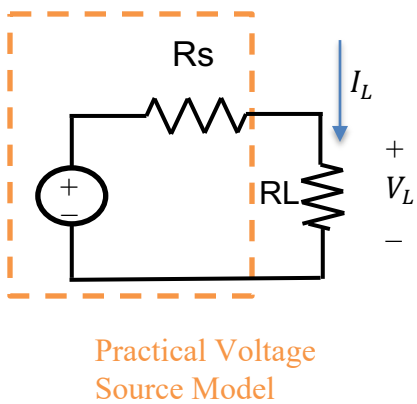

Figure 2.1: Model of a practical voltage source.

With this model, the voltage that appears across a load will vary somewhat as we vary the load resistance. In particular, the load voltage is found through the use of a simple voltage divider as:

$$V_L = V_s \frac{R_L}{R_L + R_s}. \tag{1}$$

In this lab, we will characterize a practical voltage source by measuring the load voltage for several different values of the load resistor. Alternatively, we could measure the load current for several different values of the load resistance which should be given by

$$I_L = \frac{V_s}{R_L + R_s}. \tag{2}$$

In the lab, it is important to remember that although you can often use the same digital multimeter to measure both current and voltage, you must measure current by placing the multimeter in series with an element, as shown in Figure 2.2a, and you must measure voltage by placing the multimeter in parallel with an element, as shown in Figure 2.2b.

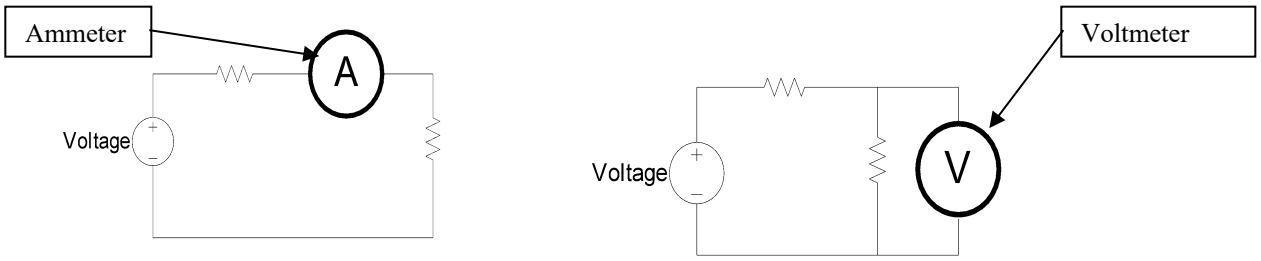

(a) Ammeter Connection (b) Voltmeter Connection

Figure 2.2: Circuit diagram for connections.

In this lab our voltage source will be a standard household 1.5V AA battery.

Prelab –

Be sure to read the entire Lab 2. For your pre-lab, please answer the following questions:

A. For the circuit drawn in Figure 2.3 (with the switch open), answer the following questions given $V_S = 1.3V$.

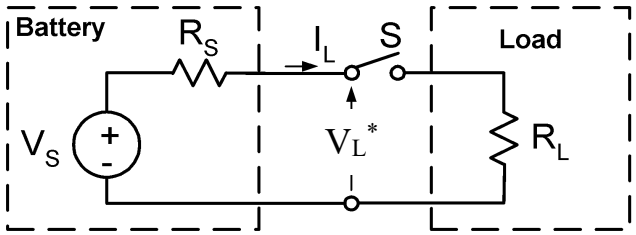

Figure 2.3

1. What is the value of V_L^*?
2. Can you determine the value of R_S or R_L? If so, what are their values? If not, why not?

B. For the circuit drawn in Figure 2.4, answer the following questions given $V_S = 1.5V$, $I_L = 15mA$ and $V_L = 1.425V$.

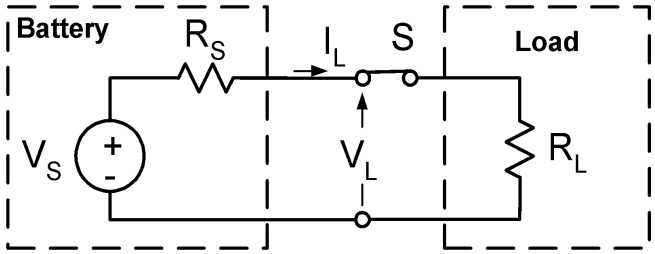

Figure 2.4

1. What is the value of R_L?
2. What is the value of R_S?
3. How much power is dissipated in R_L?

C. Model the circuit in Figure 2.4 in SPICE using the value of R_S and R_L calculated above in B.1 and B.2 and the value given for V_S. Do your SPICE results match your calculations? If not, you should recheck your calculations and your simulations. Print a screenshot of your SPICE schematic with the results of your operating point simulation shown and hand it in as part of your pre-lab. See Appendix I in the lab manual for a brief introduction to SPICE simulation using LTspice. **Note:** You do not need to simulate the switch in SPICE. Just connect a wire between the two resistors.

D. Suppose that a certain battery produces a voltage of 1.6V without a load connected (open circuit) and a current of 700 mA when shorted. According to these specifications, if we were to model this as an ideal voltage source in series with a source resistance, what should the source voltage and internal resistance be? Justify your answer.

Procedure

Parts needed:

Two, 1.5V AA batteries with holders
A variety of resistors, ¼ W

Task #1 – Measuring the voltage and internal resistance of a battery

Place an AA battery in your battery holder provided in your parts kit. Then connect the two leads from the battery holder to two different nodes in your breadboard. Connect a load resistor across the terminals of the battery and use the bench voltmeter or your PMD to measure the voltage across the load resistor. Your circuit should look like that shown in Figure 2.2b. Repeat this set of measurements (R_L, V_L) for several different values (at least 7) of the load resistance. The more data you can collect, the better your results will be. Also, it will be best if you can choose load resistance values that span the range of 50 Ohms to about 2000 Ohms. Your load resistances will be somewhat constrained by what you have in your lab kit, but you can use series and parallel combinations of the resistors you have to create other values. Record your data in your lab notebook in a table similar to Table 1 at the end of this lab. **Note:** DO NOT connect a resistance of less than 10 Ohms across the terminals of the battery. (In the lab report, explain why this is important. **Hint:** consider the power rating of the resistors in your parts kit.)

In your lab report, you should make a plot of your measured data (plot V_L vs. R_L). You should also find the appropriate theoretical curve (e.g., from equation (1)) with values of (R_S, V_S) that make the theoretical curve have the "best fit" to the measured data. In so doing, you will have determined the voltage, V_S, and internal resistance, R_S, of the battery. A typical plot is shown in Figure 2.5.

Note 1: This is completely made up data for illustration purposes only. Don't expect your results to look exactly like this.

Note 2: The theoretical curve governed by equation (1) is not linear (i.e., a straight line). How do you choose the values of (R_S, V_S) that makes the theoretical curve best fit the data observed? There are a number of ways to do this. The simplest may be to "linearize" your data. You should have covered this concept in your Freshmen engineering course, but if not, in our case we can rewrite equation (1) in a linear form as follows

$$V_L = V_S - \frac{V_L}{R_L} R_S. \qquad (2)$$

Now make a plot of your data points as V_L vs. $\frac{V_L}{R_L}$. Use standard curve fitting techniques to fit the best line to the points. The slope and intercept of that line should provide you with your measured values of R_S and V_S. A typical plot of the linearized data is shown in Figure 2.6.

Ultimately you should come up with an estimate of the values of (R_S, V_S) for your particular battery. Also, based on the data you measured, can you provide some feel of how much error there might be in your estimates of (R_S, V_S). How did you come up with this?

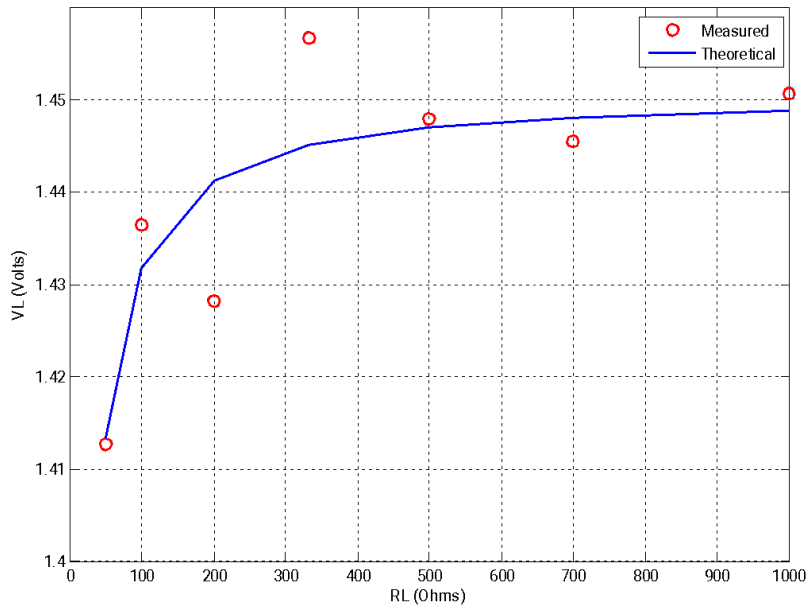

Figure 2.5: A typical plot showing a comparison of measured and theoretical values.

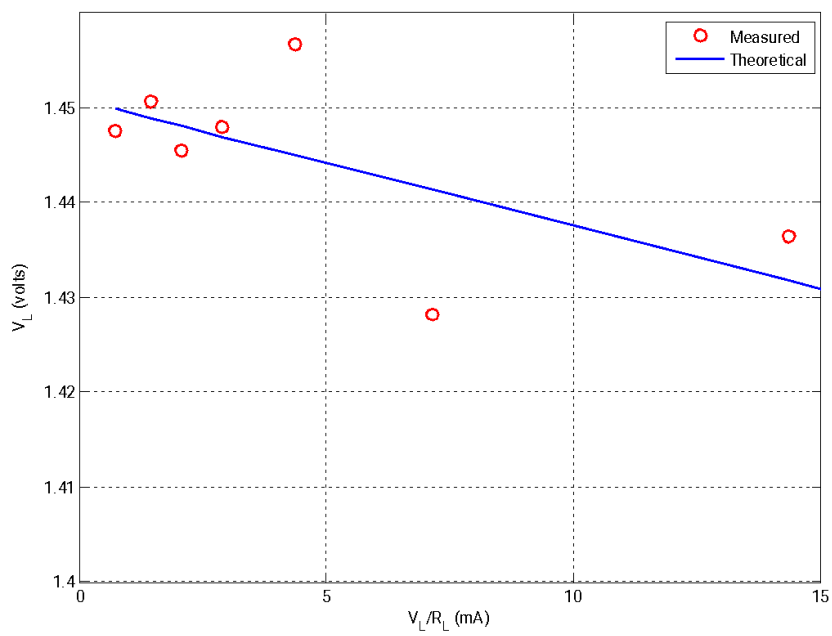

Figure 2.6: A typical plot showing a comparison of measured and theoretical values in their linearized form.

Task #2 – Measuring voltage and internal resistance of a series combination of batteries. Once you have the procedure down for estimating the voltage and internal resistance of the AA battery. Repeat the procedure with another battery (using the other battery holder in your parts kit). You should then have a model (i.e., a value of the pair (R_S, V_S)) for each battery/holder

combination. Then place the two batteries in series to create a 3V source. (Again your actual value of the voltage will not be exactly 3V.) Following the procedure from Task 1, measure the actual voltage and internal resistance of the series combination of the two batteries. In your report comment on whether or not the values you found for (R_S, V_S) for the series combination aligns with what you thought it should be given the model you determined for each individual battery. If your results are not what you expected, please discuss what the sources of the errors might be.

Before you leave the lab …

If you did your lab measurements on your own this week (outside of the lab using your PMD) you should be prepared to demonstrate to your TA how you made your lab measurements. The TA will show you how to use the DMM in the lab to measure not only voltages but currents and resistances. You should use the lab DMM to measure the actual resistances of the various resistors and resistor combinations you used in this lab experiment. In your lab report, you might want to comment on how the differences between the nominal and measured values of the various resistors might corrupt your measured values of the voltages and internal resistances of the various batteries.

Report Requirements –

Lab Report 2 Should Include:

1. A title page with the names of all people in your group, your section number, and the name of your TA. It should also include the date the lab was performed and the date the lab report is due.
2. A write up for Tasks #1 & #2 TOGETHER
    A. Procedure – summarize, in your own words, the procedure you did and how you did it. You only need a few sentences.
    B. Data Tables – Retype the data tables with the data you collected. You need to reproduce ALL of the data tables for Tasks #1 & 2 in this part.
    C. Sample calculations – TYPE the methods you used for any calculations. In particular, explain how you went from the data collected to the estimate of your source values (R_S, V_S).
    D. Discussion –A good engineer needs to not only find solutions to given problems, but also have a good understanding of how accurate/reliable these answers are. As part of the discussion you should discuss how much error there is in your estimated values of the practical voltage source parameters and how you arrived at those error

values based on the data you measured. In hindsight, is there any way you might have been able to change the design of the experiment in order to produce more accurate estimates of the source parameters?

Tables and Results –

Table 1: Task #1 (AA Battery, Add more rows if necessary)

Nominal R_L	Measured R_L	Measured V_L

Table 2: Task #2 (2nd AA Battery, Add more rows if necessary)

Nominal R_L	Measured R_L	Measured V_L

Table 3: Task #2 (Series Combination of two AA Batteries, Add more rows if necessary)

Nominal R_L	Measured R_L	Measured V_L